Pro/E filename: ARCHITECTURAL_DIM_DRAWINGS
Software Rev. Wildfire 5.0,M060

REVISIONS				
REV	ECN	DESCRIPTION	DATE	APP'D

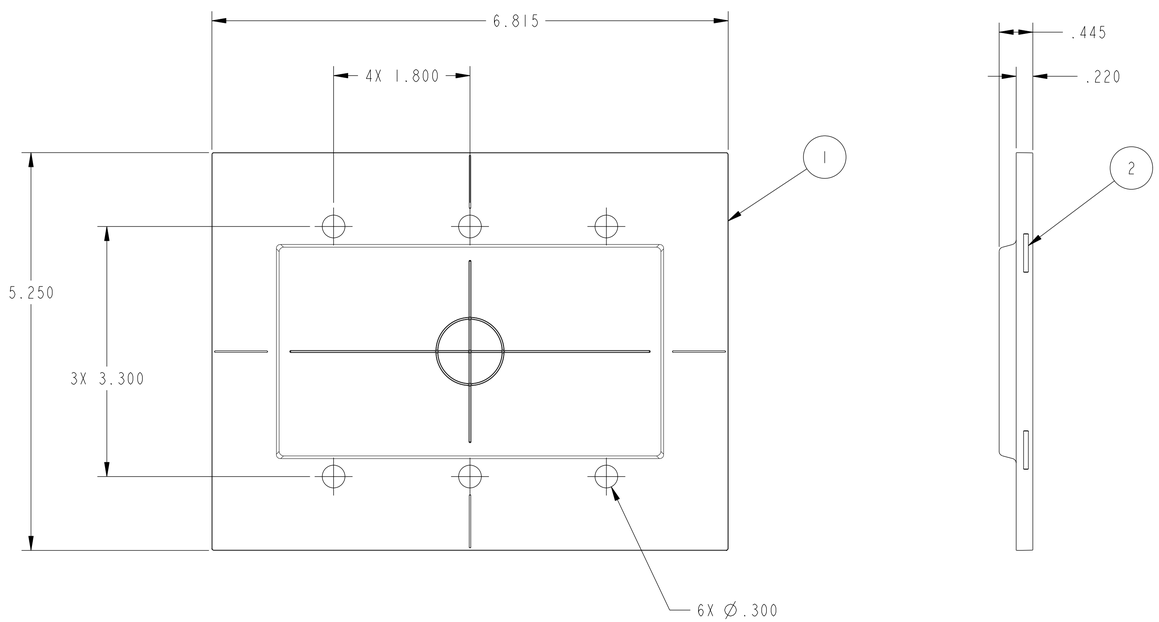

NOTES:
1. ALL DIMENSIONS SHOWN ARE NOMINAL DIMENSIONS.

PROPRIETARY NOTICE
THIS DOCUMENT IS THE PROPERTY OF NASSCO PRODUCTS LLC AND CONTAINS TRADE SECRETS. IT IS DELIVERED TO YOU IN CONFIDENCE AND IS NOT TO BE DISCLOSED TO OTHERS, COPIED (IN WHOLE OR IN PART), AND SHALL NOT BE USED FOR ANY PURPOSE EXCEPT IN THE MANUFACTURE OF ITEMS BY YOU FOR NASSCO PRODUCTS LLC.

MATERIAL -- / --
CASTING NO. --
FORGING NO. --
OTHER DOCUMENTS

DO NOT SCALE DRAWING.
DIMENSIONS ARE IN INCHES.
UNLESS OTHERWISE SPECIFIED:

SURFACE FINISH WHERE SHOWN
BREAK SHARP EDGES .003-.015
DWG INTERPRETATIONS PER ASME Y14.5M

APPROVALS	DATE
DRAWN N. Rosenblum	20-MAY-2019
CHECKED	
PROJ ENGR	
MAT'L ENGR	
MFG ENGR	
APP'D ENGR	
APP'D ENGR	

NASSCO PRODUCTS LLC
FT. LAUDERDALE, FLORIDA

TITLE
PROTECTION PLATE ASSY, 3G

SIZE	CODE IDENT NO	DWG NO.	REV.
D		HAT-PROTECTPLT-ASSY-3G	1R

SCALE 1.000 | CALC. WT. | ACT. WT. | SHEET 24 OF 36

ITEM	QTY	PART NUMBER	DESCRIPTION	REV
2	8	D81	1/2" DIA X 1/16" THK NEODYMIUM MAGNET	--
1	1	HAT-PROTECTPLT-3G	PROTECTION PLATE, 3G	A